DATE January 20, 2009	OUTLINE DIMENSIONS	MOTOR TYPE: AEHH8B-CF
CAT. #: HB7/56C	3-PHASE INDUCTION MOTOR	FRAME NO. 254TC

Pole	HP	kW	Hz	VOLT	Syn.Speed r/min(rpm)
6	7.5	5.6	60	460	1200

Ins	Rating	Dimension in	Approx Weight	Bearings
F	CONT.	inches	310 LBS	DE: 6309ZC3 NDE: 6307ZC3

Totally Enclosed Fan-Cooled Type. Squirrel-cage Rotor.

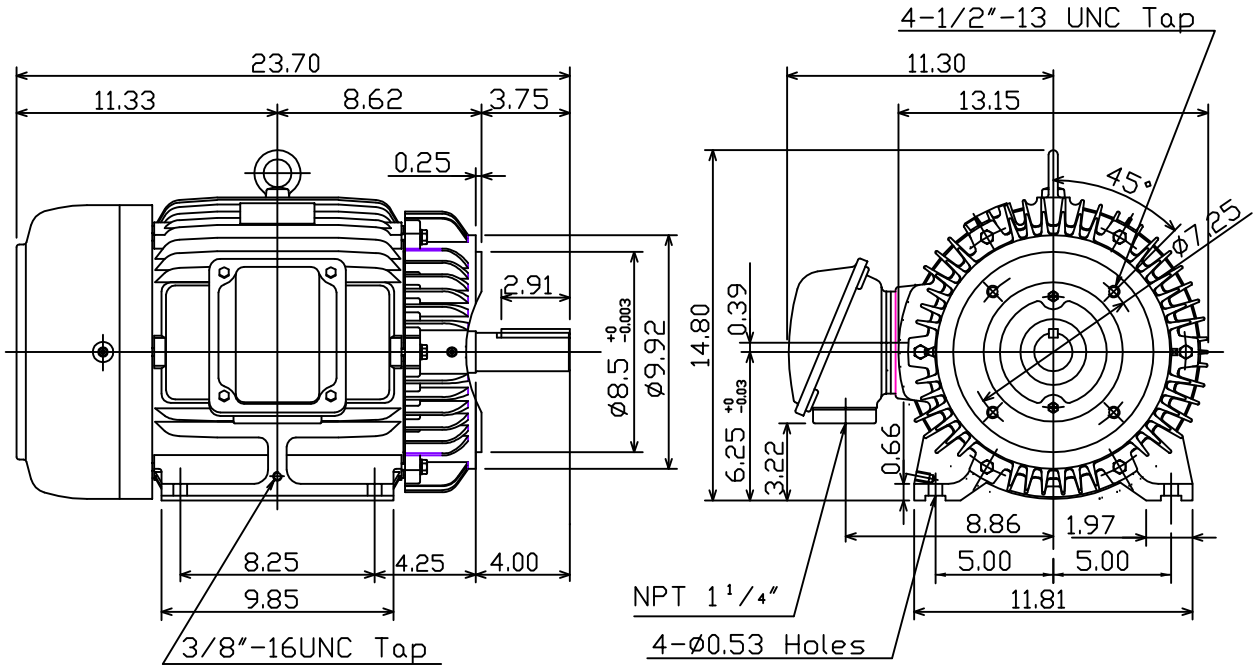

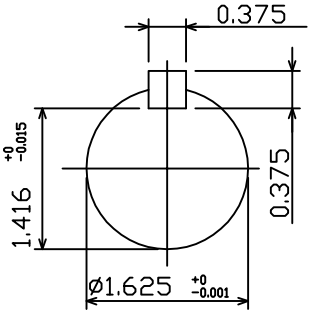

Note:
1. With Inpro Seals On Both End.

0			

DWN.	???????	01 07 09	TECO Westinghouse	DWG NO.
CHKD.	???????	01 14 09		31049M625660
APPD.	????????	01 14 09		